EE-434 Power Electronics

Engr. Dr. Hadeed Ahmed Sher

Ghulam Ishaq Khan Institute of Engineering Sciences and Technology
Topi 23460, Pakistan

hadeed@giki.edu.pk

June 6, 2020

Overview

1. CFW— RL Load
2. Controlled FWR as inverter

CFW— RL Load

Circuit below shows a full wave full controlled bridge rectifier with an RL load. The current may be continuous or discontinuous.

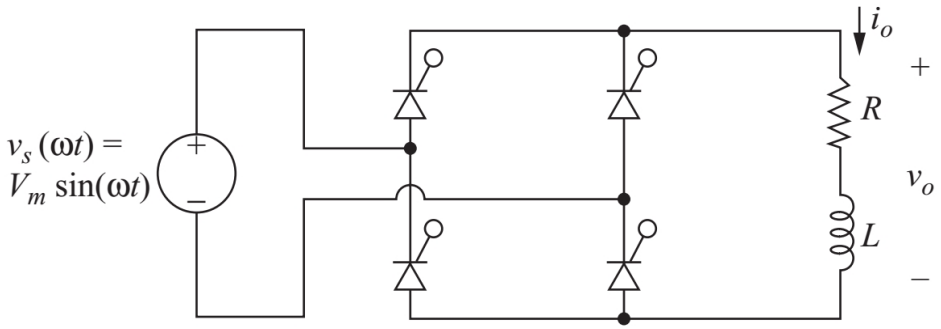

Two modes of operation are possible i.e., CCM and DCM

CFW— RL Load

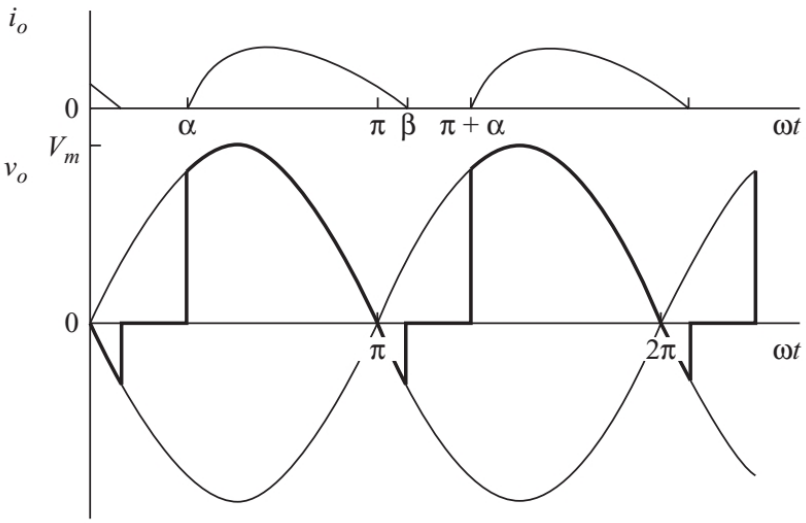

Figure shows the waveforms for discontinuous conduction mode. Assume at $\omega t = 0$ with initial current is equal to zero. S_1 and S_2 will be forward biased and S_3 and S_4 will be reverse bias for positive half cycle. At $\omega t = \alpha$ S_1 and S_2 are turned on.

Thus, all the input voltage appears across load. The output current is

$$i_o(\omega t) = \frac{V_m}{Z}[sin(\omega t - \theta) - sin(\alpha - \theta) e^{-(\omega t - \alpha)/\omega\tau}] for \alpha \leq \omega t \leq \beta \quad (1)$$

where

$$Z = \sqrt{R^2 + (\omega L)^2} \quad (2)$$

$$\theta = tan^{-1}\left(\frac{\omega L}{R}\right) \quad (3)$$

$$\tau = \frac{L}{R} \quad (4)$$

CFW— RL Load

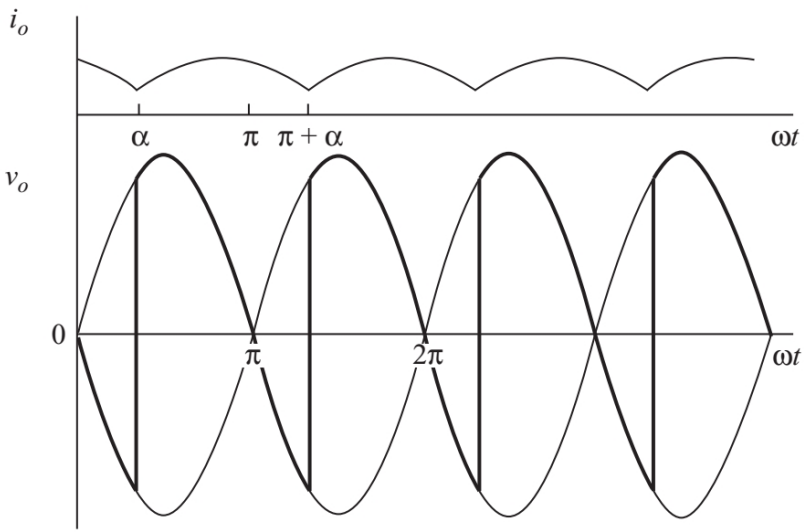

Figure shows the waveforms for continuous conduction mode.
(1) becomes zero at $\omega t = \beta$.

If β¡$\pi + \alpha$ the current remains at zero until $\omega t = \pi + \alpha$ when the gate signals are applied to S_3 and S_4 which are then forward biased. This mode of operation is called discontinuous current.

$$\beta < \alpha + \pi \implies DCM \qquad (5)$$

Example 4-7

A controlled full-wave bridge rectifier has a source of 120 V_{rms} at 60 Hz, R=10Ω, L=20 mH, and $\alpha = 60°$. Determine (a) an expression for load current, (b) the average load current, and (c) the power absorbed by the load.

Solution:

$V_m = \frac{120}{\sqrt{2}} = 169.7V$ and

$Z = \sqrt{R^2 + (\omega L)^2} = \sqrt{10^2 + (377 \times 0.02)^2} = 12.5\Omega.$

$\theta = tan^{-1}(\frac{\omega L}{R}) = 0.646$rad

$\omega\tau = \frac{\omega L}{R} = 0.754$ rad

$\alpha = 60° = 1.047rad$. Substituting in (1)

$$i_o(\omega t) = 13.6sin(\omega t - 0.646) - 21.2e^{-\omega t/0.754}A \quad (6)$$

$$for \alpha \leq \omega t \leq \beta$$

Solving $i_o(\beta)$=0 numerically for β. This gives $\beta = 3.78rad(216°)$. Since $\pi + \alpha$=4.19¿β, the current is discontinuous and above expression for current is valid. Average load current is

$$I_o = \frac{1}{\pi}\int_{\alpha}^{\beta} i_o(\omega t)d(\omega t) = 7.05A \quad (7)$$

Power absorbed is

$I_{rms}^2 R = (8.35)^2(10) = 697$W

CFW— RL Load

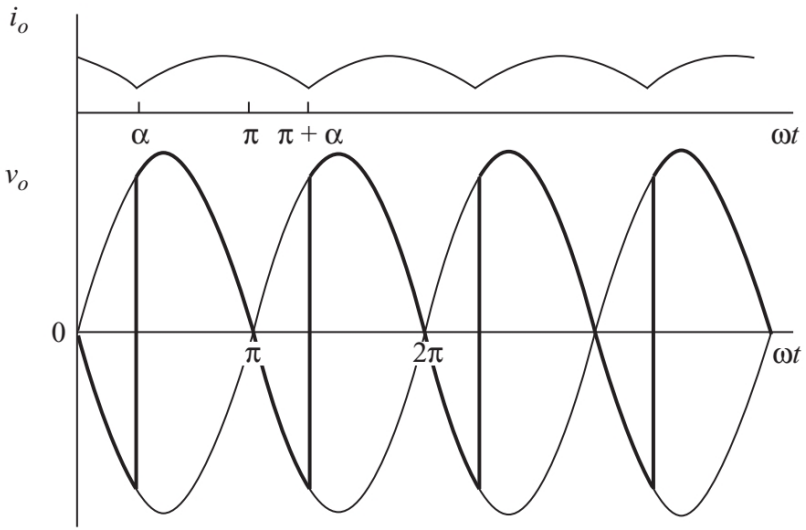

If the load current is still positive at $\omega t = \pi + \alpha$ when gate signals are applied to S_3 and S_4 then, S_3 and S_4 are turned on and S_1 and S_2 are forced off.

The initial condition for current in negative half cycle is non-zero and therefore, the current function does not repeat. The boundary between CCM and DCM occurs when $\beta = \pi + \alpha$. The equation for DCM mode cannot be applied here. The current must be greater than zero for CCM.

$$i(\pi + \alpha) \geq 0 \tag{8}$$

CFW— RL Load

Using the above equation

$$sin(\pi + \alpha - \theta)sin(\pi + \alpha - \theta)e^{-(\pi+\alpha-\alpha)/\omega\tau} \geq 0 \tag{9}$$

Using

$$sin(\pi + \alpha - \theta) = sin(\theta - \alpha) \tag{10}$$

and

$$sin\big(\theta - \alpha\big)\big(1 - e^{-(\pi/\omega\tau)}\big) \geq 0 \tag{11}$$

solving for α,

$$\alpha \leq \theta \tag{12}$$

using

$$\theta = tan^{-1}\left(\frac{\omega L}{R}\right) \tag{13}$$

The condition for CCM is

$$\alpha \leq tan^{-1}\left(\frac{\omega L}{R}\right) \tag{14}$$

CFW— RL Load

Equation (5) or (14) can be used to establish if the load current is continuous or discontinuous.
The voltage and current in CCM mode are determined using the Fourier series expressed below

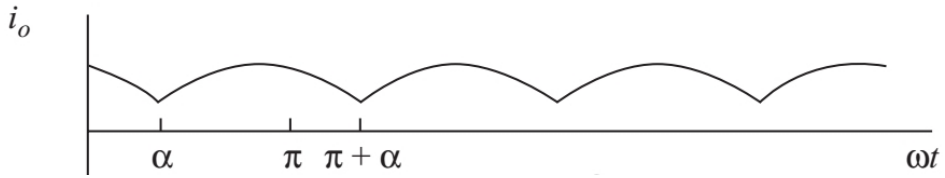

$$v_o(\omega t) = \underbrace{V_0}_{\text{DC}} + \underbrace{\sum_{n=1}^{\infty} V_n cos(n\omega_0 t + \theta_n)}_{\text{harmonics}} \tag{15}$$

This kind of waveform contains the dc part and even as well as odd harmonics.

CFW— RL Load

The dc (average) value is calculated as

$$V_o = \frac{1}{\pi}\int_{\alpha}^{\alpha+\pi} V_m sin(\omega t) d(\omega t) = \frac{2V_m}{\pi} cos\alpha \tag{16}$$

The harmonics are calculated as

$$V_n = \sqrt{a_n^2 + b_n^2} \tag{17}$$

where,

$$a_n = \frac{2V_m}{\pi}\left[\frac{cos(n+1)\alpha}{n+1} - \frac{cos(n-1)\alpha}{n-1}\right] \tag{18}$$

$$b_n = \frac{2V_m}{\pi}\left[\frac{sin(n+1)\alpha}{n+1} - \frac{sin(n-1)\alpha}{n-1}\right] \tag{19}$$

for n=2,4,6.....

CFW— RL Load

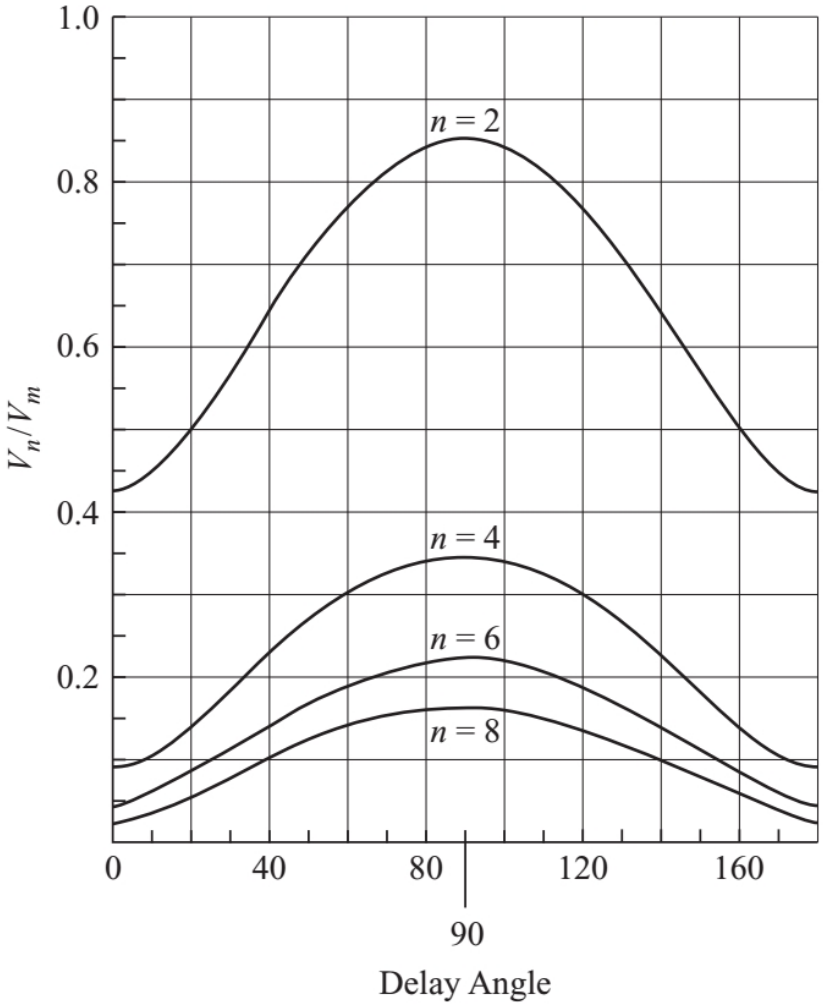

Figure shows the relationship between normalized harmonic content of output voltage and delay angle.

CFW— RL Load

The fourier series for current is determined by superposition. The current amplitude at each frequency is determined as follows.

$$I_0 = \frac{V_0}{R}$$
$$I_n = \frac{V_n}{Z_n} = \frac{V_n}{|R + jn\omega L|} \tag{20}$$

The rms current is determined by combining the rms currents for ac and dc parts

$$I_{rms} = \sqrt{I_o^2 + \sum_{n=2,4,6\ldots}^{\infty} \left(\frac{I_n}{\sqrt{2}}\right)^2} \tag{21}$$

The impedance of the inductance increases with increase in harmonic number. It may be necessary to solve for only a few terms of the series to calculate the rms current. For a large value of inductance, the ac terms will be small and therefore the current is essentially dc.

Controlled FWR as inverter

Using a fully controlled full bridge converter, power can be supplied by the load to the source.

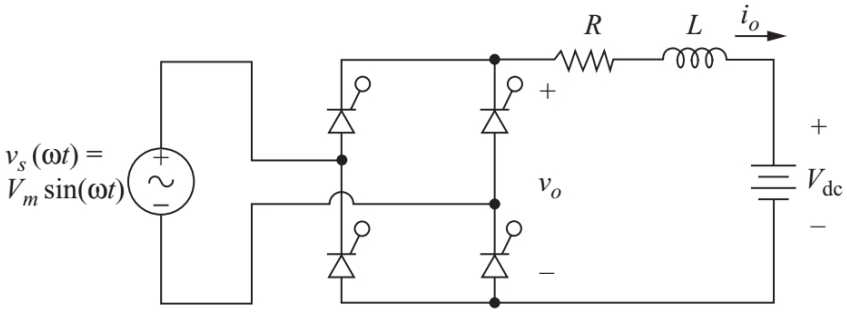

The load current must be in the direction shown because of the SCRs in the bridge. However, the power can only be supplied by the dc source if V_{dc} is negative.

For power absorbed by the bridge and transferred to the ac system, the birdge output voltage V_o must also be negative.

For a CCM the birdge output voltage is given as

$$V_o = \frac{2V_m}{\pi} cos\alpha \tag{22}$$

Controlled FWR as inverter

For delay angle more than 90 degree, the output voltage is negative. For a CCM the birdge output voltage is given as

$$90^\circ < \alpha < 180^\circ \implies V_o < 0 \tag{23}$$

The voltage waveform for $\alpha = 150^\circ$ and CCM is shown below.

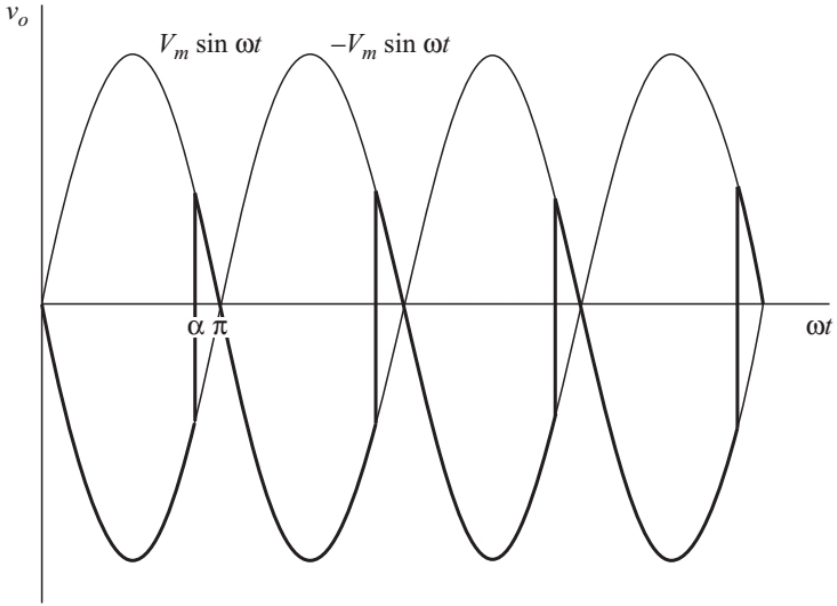

Assuming a large inductor,

$$P_{bridge} = P_{ac} = -I_o V_o \tag{24}$$